This Drawing and its contents are our exclusive property and must not be copied, reproduced, transmitted or communicated to any other party or used for purposes not specificalls permitted by IV Produkt AB

GRUNDFOS MGE (1-phase)

OLDER MODEL WITH ALL BLACK FREQUENCY INVERTER

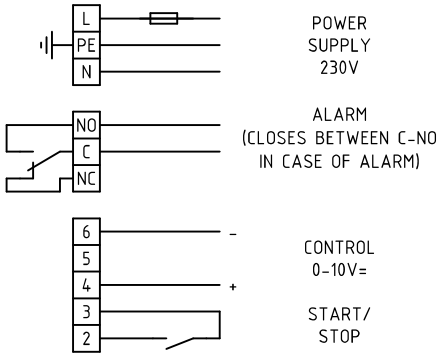

GRUNDFOS MGE FM200 (1-phase)

NEW MODEL WITH RED DETAIL ON THE FREQUENCY CONVERTER

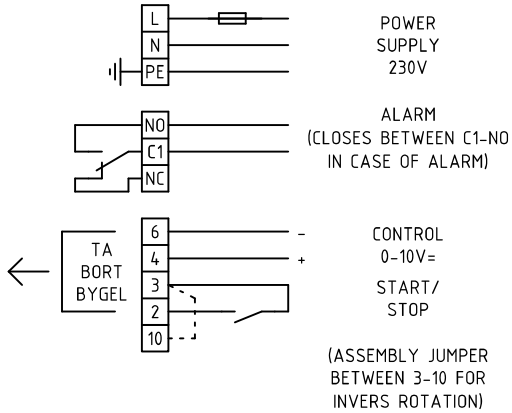

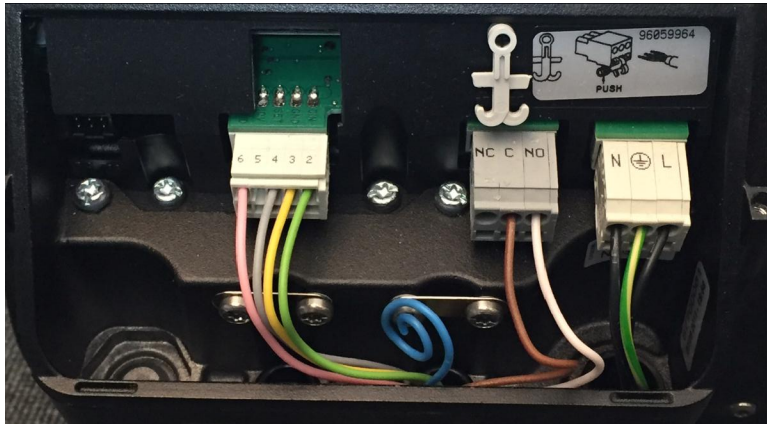

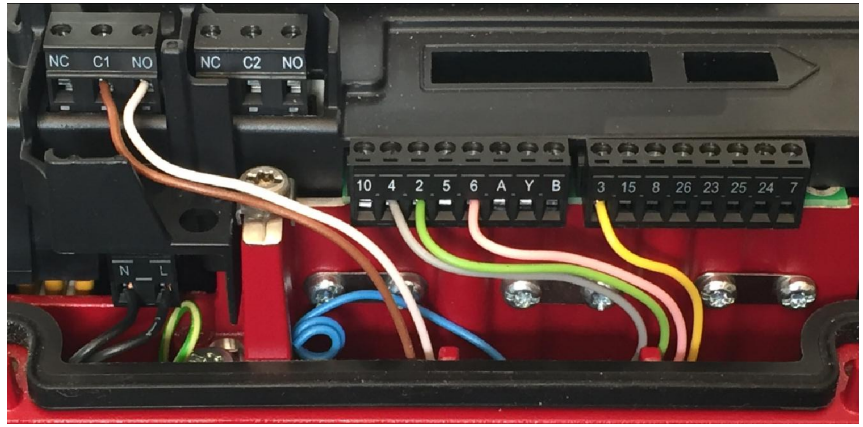

CABLE LEARNING COLORS ON THE PHOTOS ARE THE MOST COMMON

No.	REVISION	SIGN.	DATE

IV PRODUKT

CONNECTINGOF GRUNDFOS MOTORS
WITH BUILT IN FREQUENCY INVERTER

Fan replacement MGE -> MGE FM200
INK-FL-3031EN

DATE	DESIGNED BY	CONT.
2018-01-31	KS	-
PROJECT NUMBER	ACCEPTED BY	SHEET
-		1